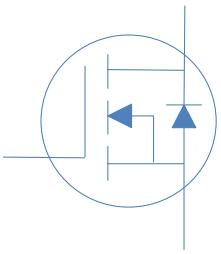

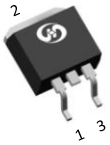
2
1 3

1 2 3

Hunteck

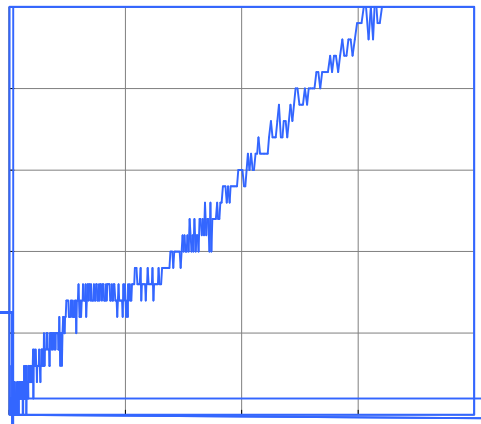

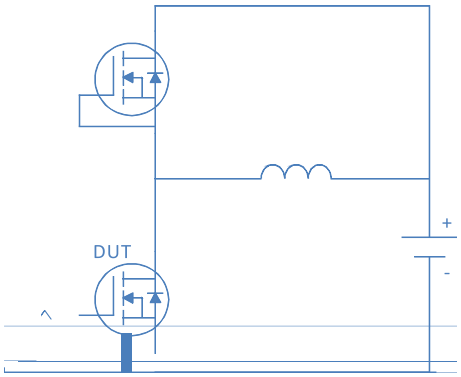
DUT
+
-

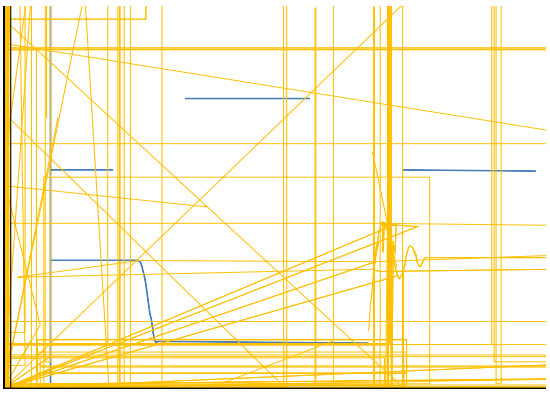

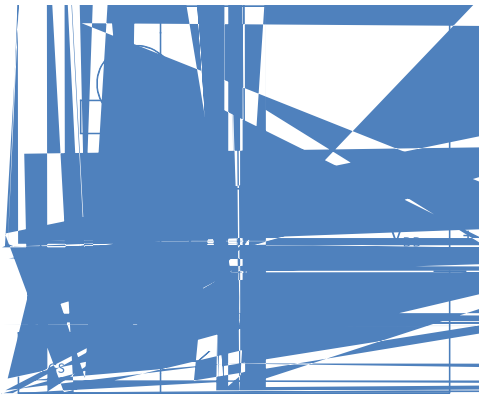

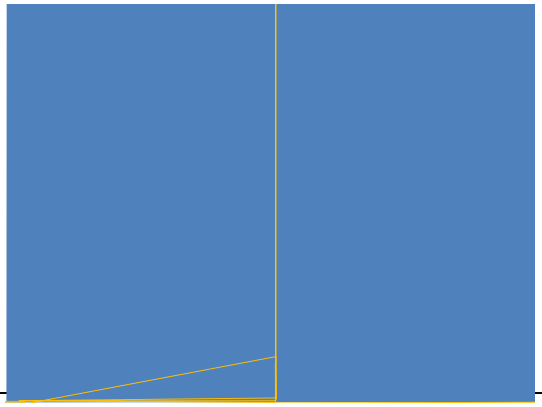

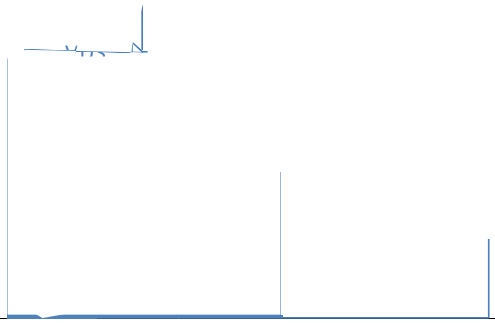

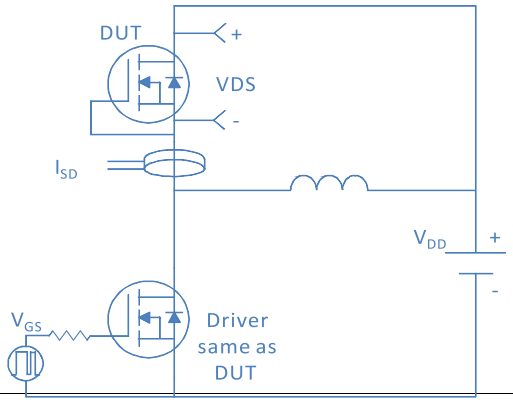
DUT
+
VDS
-
I_{SD}
V_{DD}
+
-
V_{GS}
Driver
same as
DUT

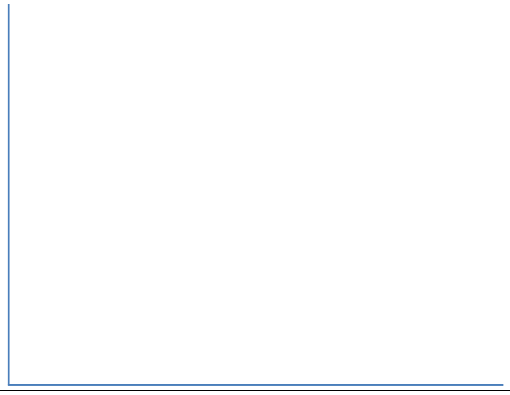

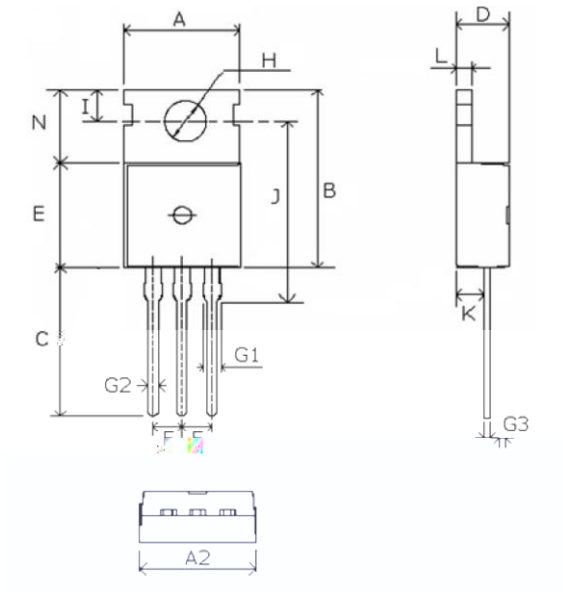
A
H
D
L
N
I
E
J
B
C
G1
G2
K
G3
A2

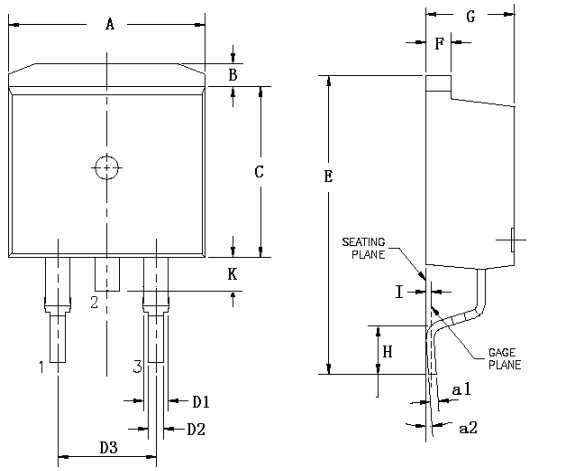
A
B
C
K
1
2
3
D1
D2
D3
G
F
E
SEATING PLANE
I
H
GAGE PLANE
a1
a2